KL114

Item Code: 07003703

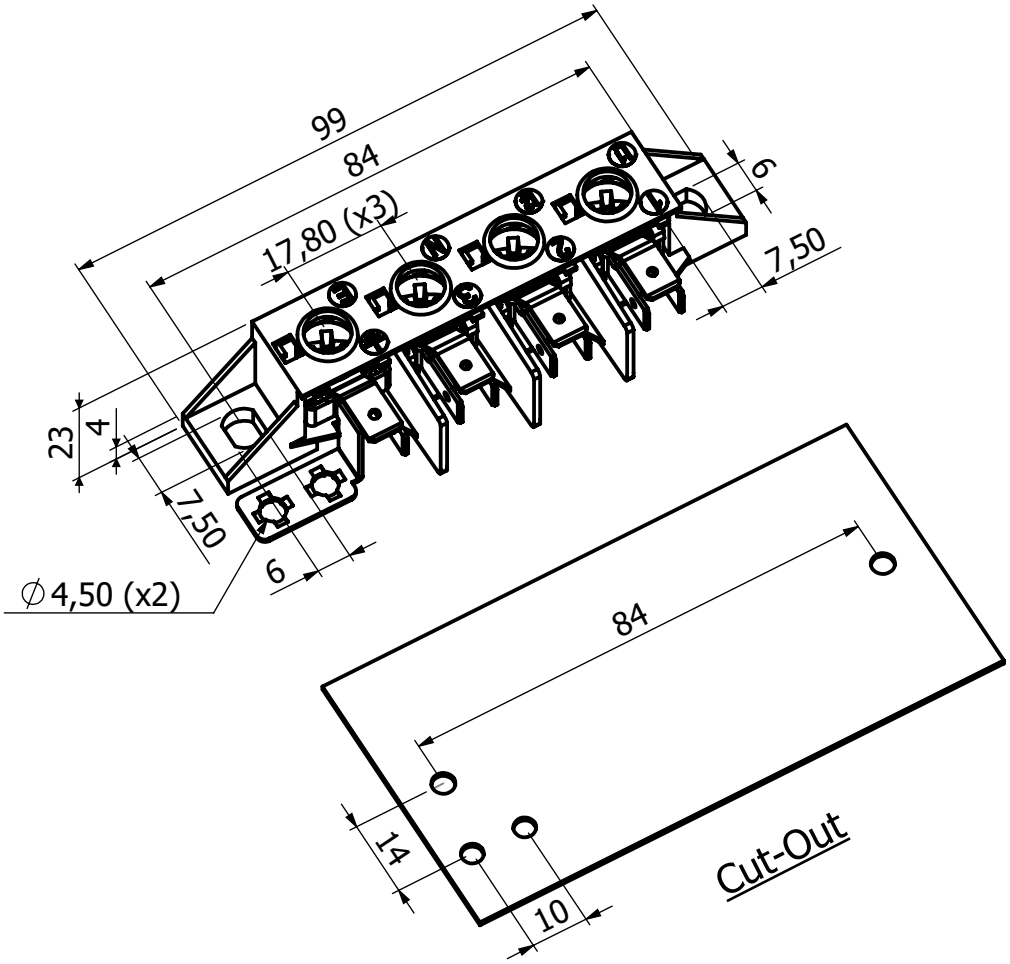

All dimensions in "mm"

Specifications	**EN Standards**	**UL/CSA Standards**
Nominal Voltage	AC 450V	AC 300V
Nominal Current	41A	
Operating Temperature	T150	T130
Number of Poles	3P+E	
Rated Connecting Capacity	1,5-6 mm²	18-8 AWG Stranded
Degree of Protection	IP00	
Components	**Material**	
Body	PA 66-GF25%-V0-GWT 750°C, Black	
Terminals	6,3x0,8 mm male tabs acc. to EN 61210 Steel, Zn Plated, Cr³ passivated	
Screws	M5x10, Steel, Zn Plated, Cr³ passivated	
Approvals	**Standards**	
VDE	DIN EN 60998-1:2005-03; EN60998-1:2004 DIN EN 60998-2-1:2005-3;EN 60998-2-1:2004 DIN EN 61210:2011-06; EN 61210: 2010	
UL CSA	Terminal Blocks, UL 1059 and Terminal Blocks, CAN/CSA C22.2 No. 158-10.	